5 W 3211 B

5-1/4'' W® cone woofer-midrange

- **Thick zamak alloy metal cast frame**
- **Semi exponential "W"® cone, rubber surround**
- **25mm diameter voice coil, Nomex® former, phase plug**
- **Efficiency: 87.2dB**
- **Very neutral midbass**

Specifications

Nominal power	50 W	
Maximum power	70 W	
Sensitivity	86.22 dB	
Cone	"W"®	
Surround	rubber	
Nom. impedance	6 ohms	
DC resistance	6.6 ohms	
VC diameter	25 mm	3.88 in
VC height	13 mm	0.51 in
Former	Nomex®	
Layers	2	
Wire	copper	
Inductance	0.57 mH	
Xmax	3.5 mm	0.14 in
Magnet d x h	85 x 18 mm	3.35 x 0.70 in
Magnet weight	361 g	0.80 lb
Flux density	1.15 T	
Gap height	6 mm	0.24 in
Net weight	1.9 kg	4.19 lb

Frequency Response / Impedance

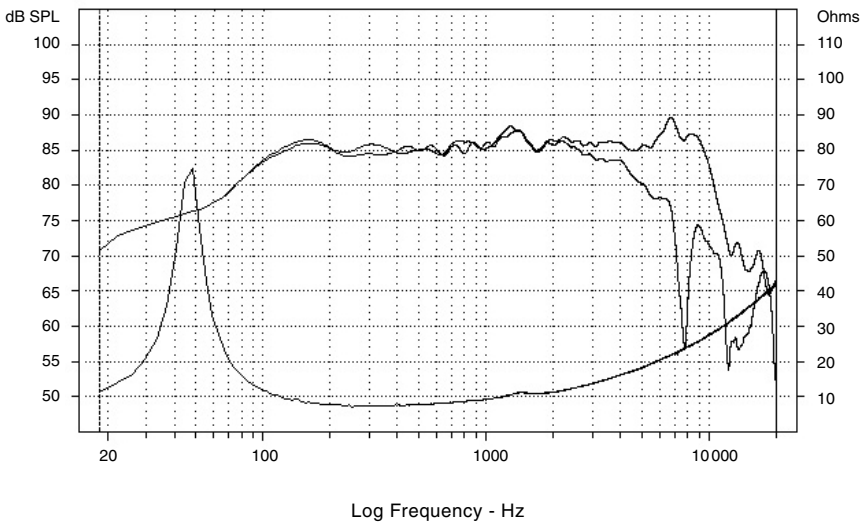

Parameters

Fs	46.6 Hz	
Vas	13.2 l	805.5 in3
Qts	0.36	
Qes	0.39	
Qms	4.23	
Re	6.6 ohms	
Sd	86.6 Cm²	13.4 in2
Cas	940E-10 m5/N	
Mas	124 kg/m4	
Ras	8589.3 ohms.ac	
Cms	1253E-6 m/N	
Mms	9.3 g	0.020 lb
Rms	0.64 g/s	
Ces	201.7 mF	
Les	57.8 mH	
Res	71.6 ohms	
Bl	6.79 N/A	
SPL	87.2 dB/W/m	

Mechanical Drawing

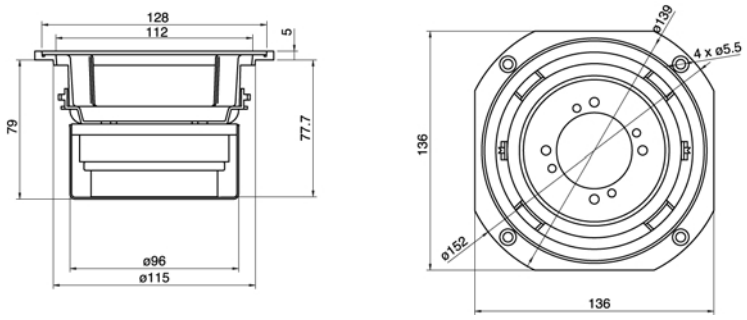

Suggested application

Load	V (l)	Fb (Hz)	F-3 (Hz)	Ql
Vented	8	57.1	57.5	7

©Focal-JMlab - SC01070403